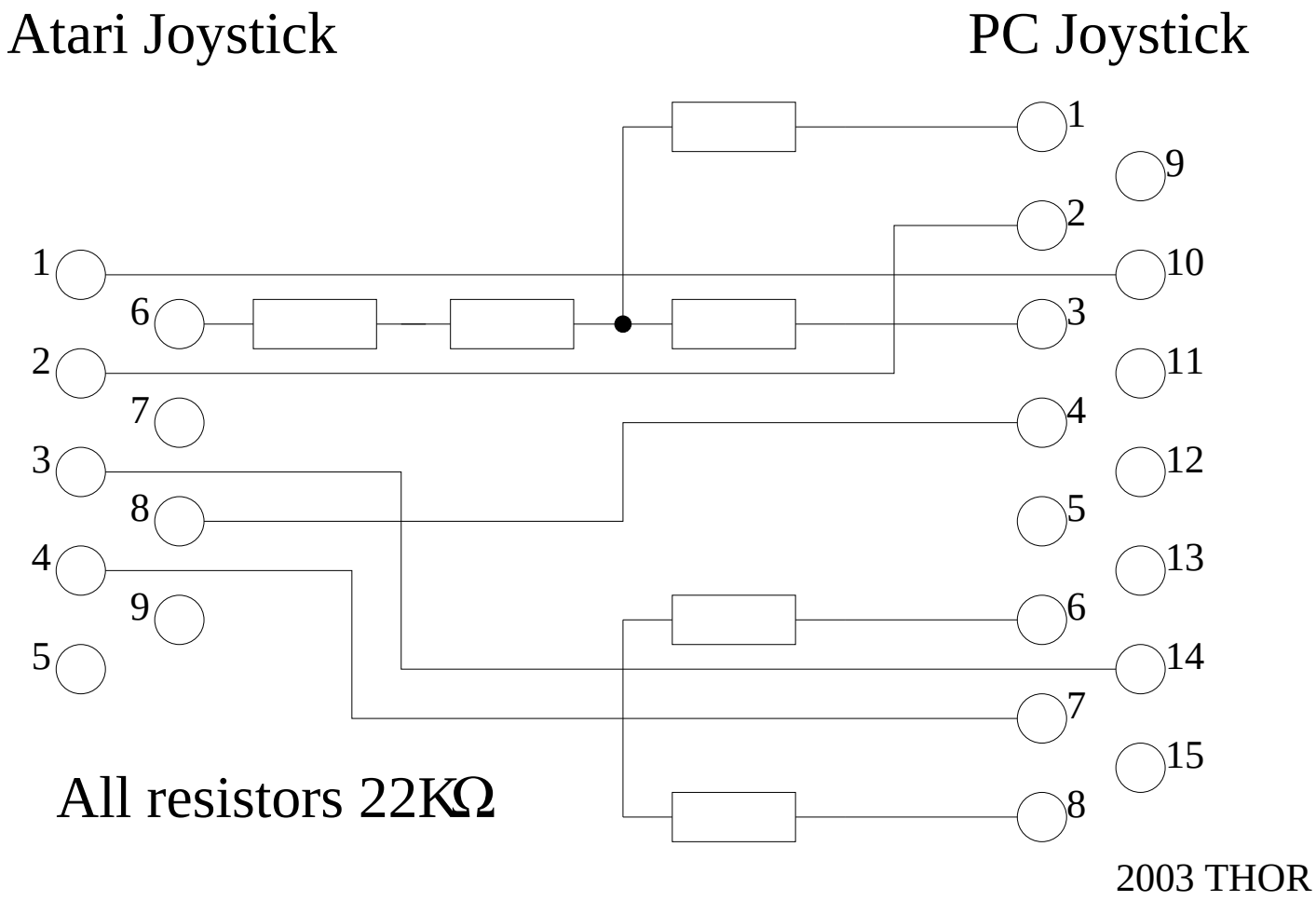"El Cheapo" Joystick Interface